A200H

200W-LED 3in1 MOVING HEAD





BEAM DETAILS

Beam angle 50%	Field angle 10%	Cutoff angle 2,5%	Intensity ratio in 120°	Intensity ratio in 90°
3.4°	4.3°	4.8°	97.1%	96.8%

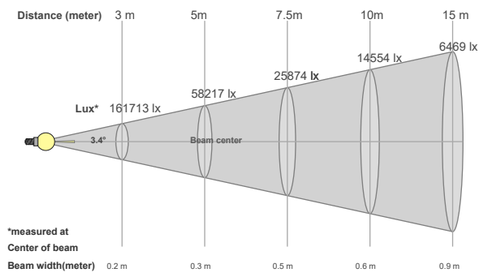

BEAM DETAILS

Beam angle 50%	Field angle 10%	Cutoff angle 2,5%	Intensity ratio in 120°	Intensity ratio in 90°
29.5°	36.2°	37.7°	97.2%	97.1%

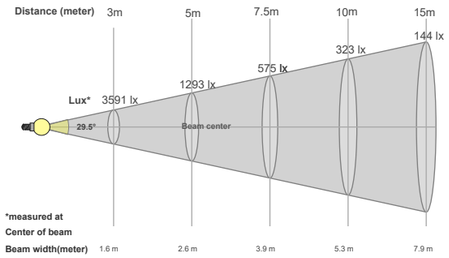

Dimension（mm）

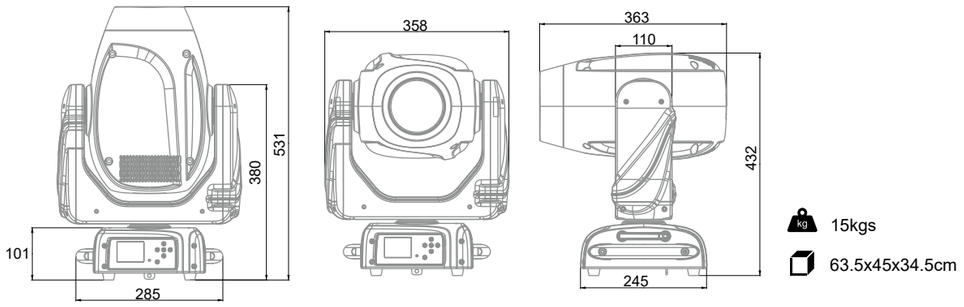

15kgs

63.5x45x34.5cm

SPECIFICATION:

Source

_ Light source: 200w white Led
_ Led life: 20.000 hours
_ Luminous Flux: 7138 lm,61600lx @5m@4.3°
_ Control: Remote on/off via DMX
_ Ballast: switching mode power supply

Optical System

_ Zoom Range: 4.3°-36.2°

X/Y

_ Pan: 540°(2.62sec)，Tilt: 265°(1.3sec)
_ 16-bit resolution
_ Auto repositioning

Colors

_ 11+open, indexable and bidirectional rainbow effect
_ Color bounce

Gobos

_ Outside ℂ13.9mm，inside ℂ11mm
_ 17+ open fixed gobos
_ 8+ open custom interchangeable position for rotating gobo wheel

Features

_ DMX channels: 21/17
_ Motorized auto foucs
_ Full range 0-100% dimmer
_ Various strobe
_ Frost
_ 8 facets prism
_ RDM function to change DMX address, display flip, X/Y Reverse and so on
_ Software upgrade via DMX or USB
_ Hibernation when lost DMX for preset time
_ Indicate temperature info of base, led
_ Fan speed auto change according to temperature

Display

_ 2.4inch super nice LCD display with friendly English/ Chinese/French/Spanish menu
_ Auto lock and flip
_ Signal：DMX/WDMX.Artnet.sACN (optional)
_ Back-up communicating IC

Power

_ Max power consumption:305W
_ Power supply:Electronic auto-ranging
_ Powercon in and out,3+5 pins / 5 pins+Ethernet
_ Input voltage range: 100~240V, 50-60Hz

Color Wheel



Static Gobo Wheel

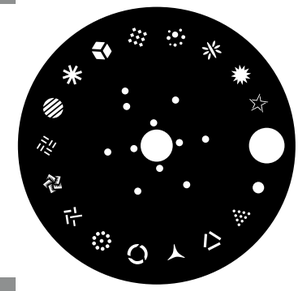

Rotating Gobo Wheel

